## 1 Quick Installation

- Save Installation Time
- Easy Removal

Data cable can be conveniently installed after the unit is attached to the equipment, increase installation speed!

( Connection Mode )

( Connection Terminals )

( Finished Connection )

## 2 Copy Setting

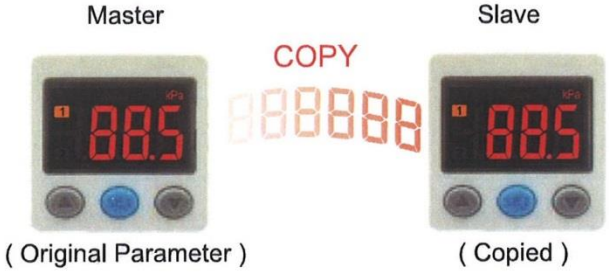


- Reduce setting errors
- Reduce setting time

Can copy the setting value from master to slave sensor.

## 3 Unit Easy Indication

- Conversion unit is on display and easy to read.

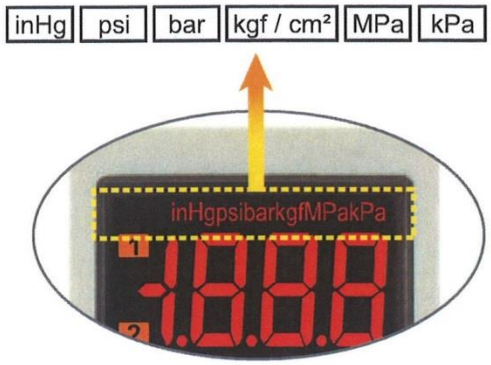


## 4 2 Color Main Display

- Display different setting conditions. Can change the setting value and color mode.

| | SoG | Sor | Grn | rEd |
|---|---|---|---|---|
| ON | Green | Red | Green | Red |
| OFF | Red | Green | Green | Red |

## 5 IP65

- Can withstand low pressure water spout from all directions, and prevent product from damaging.

## 6 Environmental Protection Design

- RoHS Compliance / Without Harmful Substance

RoHS

At "Restriction of the use of Hazardous Substance Directive" request,when processing the products, cannot use the exempted substance :
Lead(Pb) / Mercury (Hg) / Cadmium (Cd) / Hexavalent Chromium ($Cr^{IV}$) / Polybrominated Biphenyls (PBB) / Polybrominated Diphenyl Ethers (PBDE):

## PRODUCT APPLICATION

Vacuum pressure detection on the robotic arm

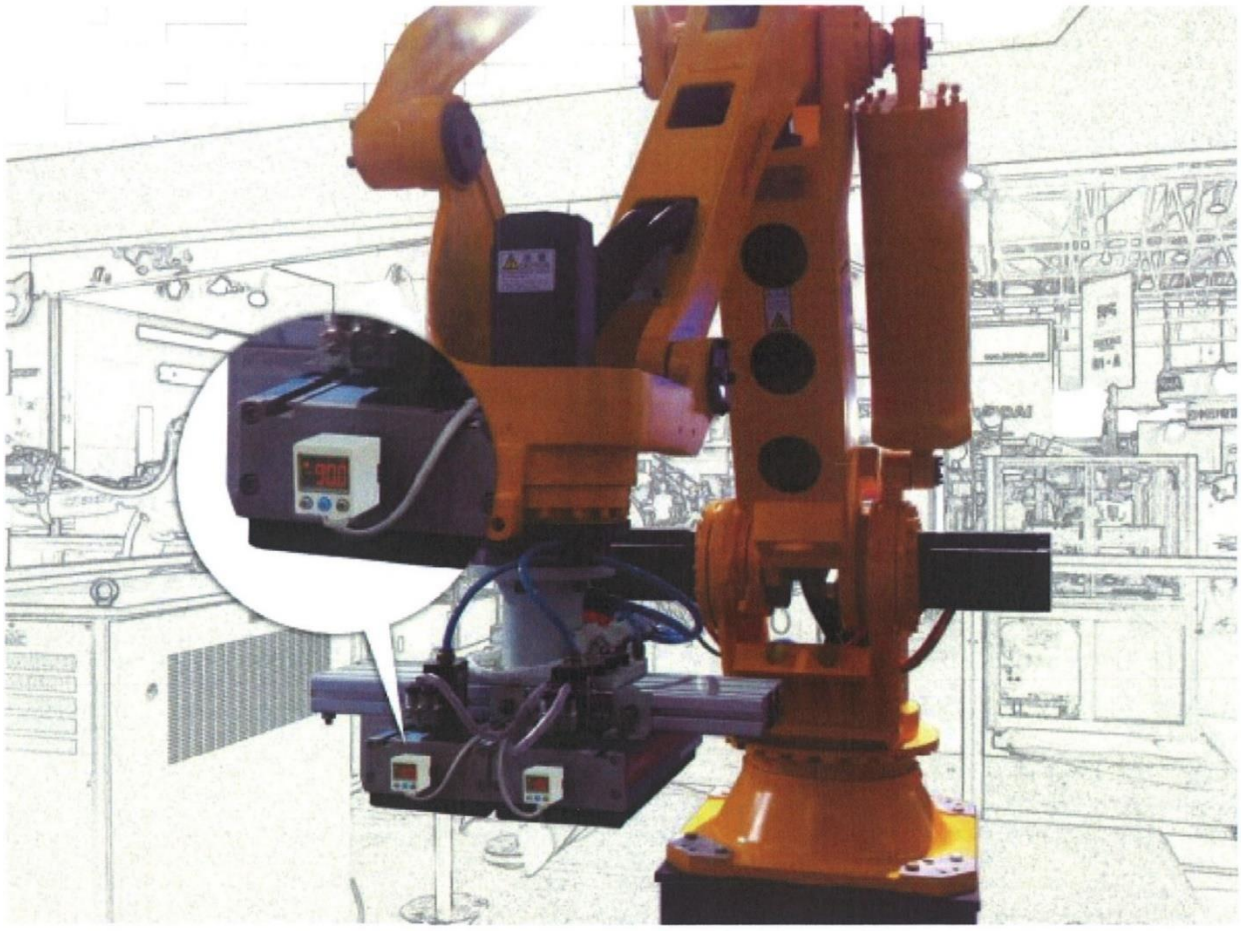

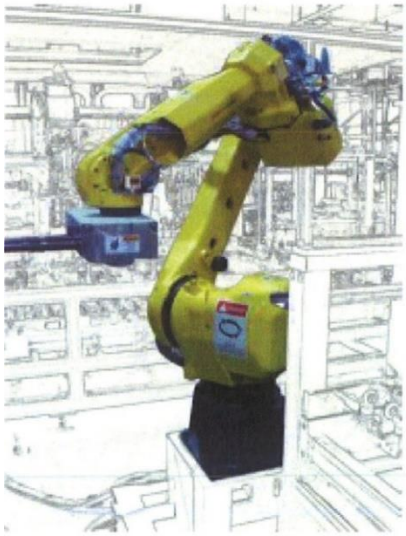

## PANEL DESCRIPTION

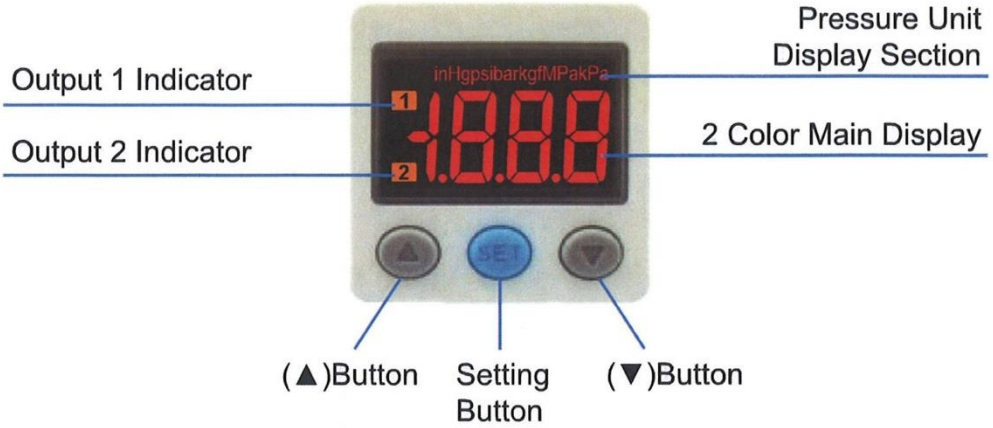


## SPECIFICATIONS

| Type | MP45P (Positive) | MP45V (Vacuum) | MP45C (Compound) |
|---|---|---|---|
| Rated pressure range | 0.0~1.000MPa | -101.3~0.0kPa | -100.0~100.0kPa |
| Set pressure resolution | 1.000MPa / 0 / -0.100MPa | 10.0kPa / 0 / -101.3kPa | 101.0kPa / 0 / -101.0kPa |
| Withstand pressure | 1.5MPa | 300kPa | 300kPa |
| Set pressure resolution | 0.001MPa | 0.1kPa | 0.1kPa |
| Switch output | NPN: open collector 2 outputs<br>Max. load current: 125mA<br>Max. supply voltage: 30V DC<br>Residual voltage: ≦ 1.5V | PNP: open collector 2 outputs<br>Max. load current: 125mA<br>Max. supply voltage: 24V DC<br>Residual voltage: ≦ 1.5V | |
| Port size | F1 : R1/8", M5 ; F2 : NPT1/8", #10-32UNF ; F3 : G1/8", M5 | | |

## FUNCTION SETTING

### ■COPY FUNCTION SETTING

- Copy function setting can use the master sensor to copy the parameter to the slave sensors.
- Before copying, please confirm the model of pressure sensor. This function cannot be used with different model.
- The copy function only can be one-to-one.
- SETTING STEP:

① Please set the copy function to on or onL on the master sensor.

Slave sensor set to SLu .

② Turn off power to both master and slave sensor.

③ Refer to connection diagram below with the master and slave sensor :

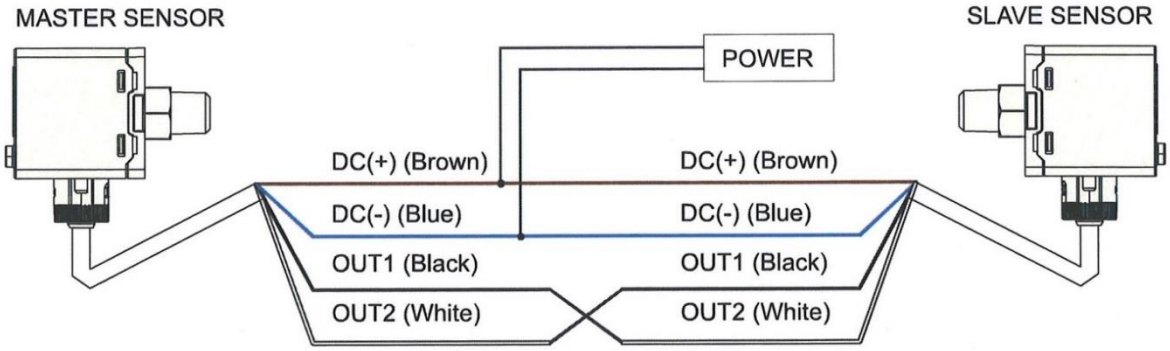


④ Turn on power at the same time to the master and slave sensor.(* 1)

⑤ Wait 5 sec., when finishing to convey the data,

the master sensor displays (alternating display) CPY ←→ Gad (Alternating display) .

the slave sensor displays (alternating display) SLu ←→ Gad (Alternating display) .

⑥ When data convey is failed,

(Master) sensor displays CPY ←→ Gad (Alternating display) . (Slave) sensor displays ErB (* 2)

⑦ Turn off power and remove the wire connection. Remove wire connection while power is still on may cause permanent damage to the sensor.

⑧ If another copy is required, set the slave sensor to SLu , then repeat step ③ to ⑤.

⑨ How to cancel the copy mode by master sensor :

When the master sensor displays CPY ←→ Gad (Alternating display) , press ▼ button to leave the copy mode.

【NOTE】* 1.If power on process is not synchronized, the data cannot be copied.

* 2.When data convey is failed, please reset (slave) sensor to SLu and recheck wire connection, then repeat step ③ to ⑤.

## ■POWER-SAVE MODE

- Under Power-Save mode, the main display will turn off if no buttons is pressed after 30 seconds.
- Under Power-Save mode, the output indicator may not synchronize with the output.
  It is normal and will not affect output operation.
- Press any button to turn-on main display temporarily.

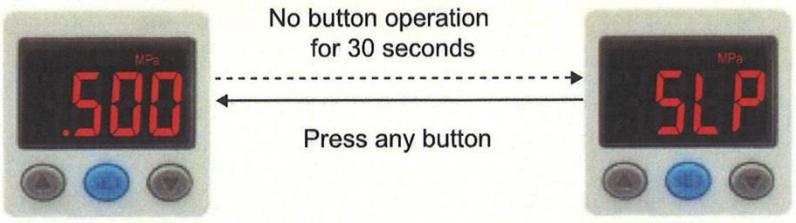


(Main display is off, sub-display will flash SLP )

## ■KEY LOCK / UNLOCK MODE

- Key lock mode, it displays as picture when pressing any key. After some time, it would be returned to measure mode.

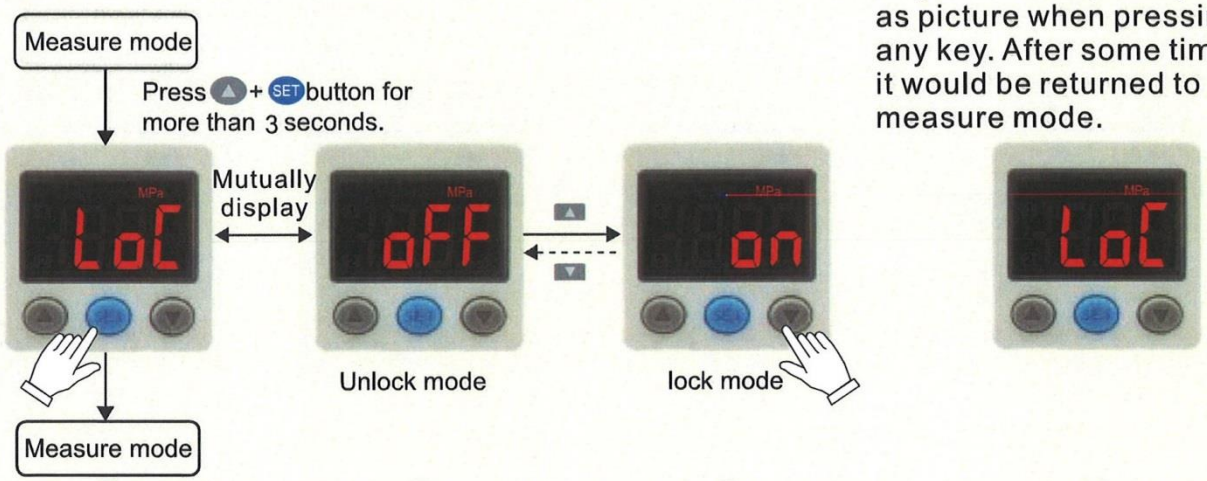


## ■ THE MAX. & MIN DISPLAY MODE

PE- : Peak value

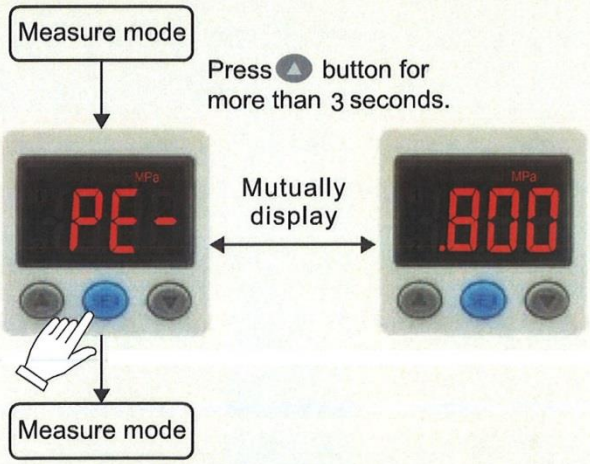


bo- : Bottom value

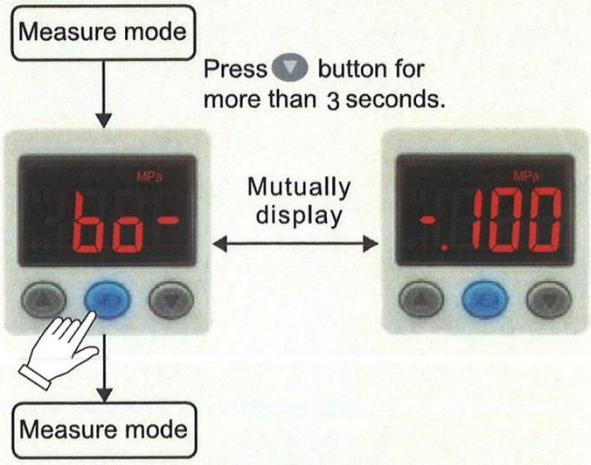

## ■ZERO POINT SETTING

- Press the ▲ ▼ button at the same time until the "00" is shown.
  Release the button to exit.

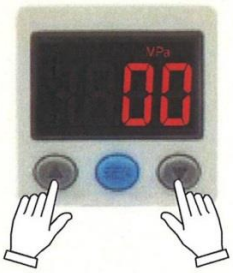


## ■ DUST AND SPLASH ENVIRONMENT

- To maintain IP65, please insert an air tube (O.D.: 4mm) into atmospheric release port and pipe the other end away from dust / spattering liquid environment.
- Use proper air tube dimension of O.D.: 4mm, I.D.:2.5mm, and the length is depending on the user's environment.

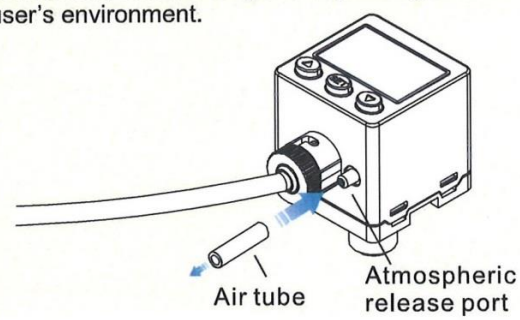


## ■ WIRE INSTALLATION INSTRUCTION

Please install the wire as the following step.

- Turn upward the salient point by terminal. (See figure ①)
- Install to the terminal to the groove by pressure sensor.(See figure ②)
- Terminal cover install to the products. (See figure ③)
- Turn the terminal cover to lock. (See figure ④)

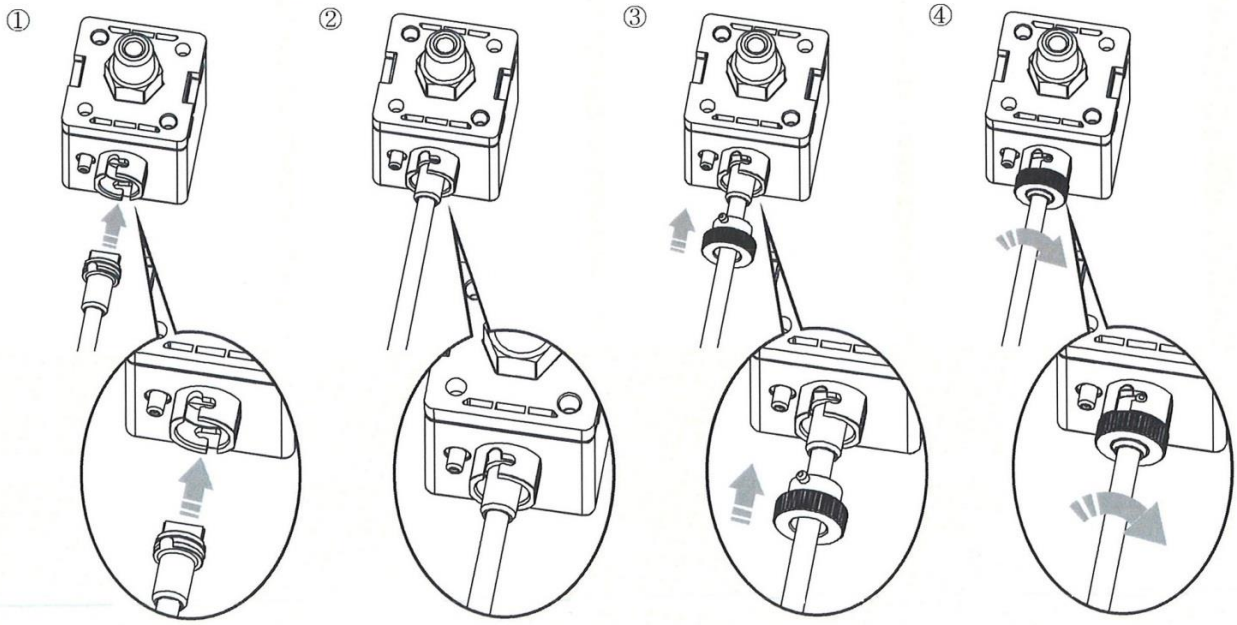

## SPECIFICATIONS

| TYPE | | MP45P (Positive) | MP45V (Vacuum) | MP45C (Compound) |
|---|---|---|---|---|
| Rated pressure range | | 0.0~1.000MPa | -101.3~0.0kPa | -100.0~100.0kPa |
| Set pressure range | | -0.100~1.000MPa | -101.3~10.0kPa | -101.0~101.0kPa |
| Withstand pressure | | 1.5MPa | 300kPa | |
| Fluid | | Air, Non-corrosive / Non-flammable gas | | |
| Set pressure resolution | kPa | - | 0.1 | |
| | MPa | 0.001 | - | |
| | kgf/cm² | 0.01 | 0.001 | |
| | bar | 0.01 | 0.001 | |
| | psi | 0.1 | 0.01 | |
| | inHg | - | 0.1 | |
| Power supply voltage | | 12 to 24V DC ±10%, Ripple (P-P) 10% or less | | |
| Current consumption | | ≦ 40mA(With no load) | | |
| Switch output | | NPN: open collector 2 outputs<br>Max. load current: 125mA<br>Max. supply voltage: 30V DC<br>Residual voltage: ≦ 1.5V | PNP: open collector 2 outputs<br>Max. load current: 125mA<br>Max. supply voltage: 24V DC<br>Residual voltage: ≦ 1.5V | |
| Repeatability(Switch output) | | ±0.2% F.S. ±1 digit | | |
| Hysteresis | One point set mode | Adjustable( *1) | | |
| | Hysteresis mode | | | |
| | Window comparator mode | | | |
| Response time | | ≦ 2.5ms<br>(chattering-proof function: 25ms, 100ms, 250ms, 500ms, 1000ms and 1500ms selections) | | |
| Output short circuit protection | | Yes | | |
| LCD display | | 3 ½ digit, 7 segment (red/green) | | |
| Indicator accuracy | | ±2% F.S. ±1 digit (ambient temperature: 25 ±3°C) | | |
| Switch ON Indicator | | Orange (1&2 Indicator) OUT1 OUT2 | | |
| Analog output (Voltage Output) (*2) | | Output Voltage: 1 to 5V ±2.5% F.S.<br>Linearity: ±1% F.S. Output impedance: about 1kΩ | | |
| Analog output (Current Output) (*3) | | Output Current: 4 to 20mA ±2.5% F.S.<br>Linearity: ±1% F.S.<br>Max.Load Impedance: 250Ω at power supply of 12V,<br>600Ω at power supply of 24V<br>Min.Load impedance: 50Ω | | |
| Environment | Environment | IP65 | | |
| | Ambient temp. range | Operation: 0 ~ 50°C, Storage:-10 ~ 60°C ( No condensation or freezing) | | |
| | Ambient humidity range | Operation/Storage: 35 ~ 85% RH ( No condensation) | | |
| | Withstand voltage | 1000V AC in 1-min (between case and lead wire) | | |
| | Insulation resistance | 50MΩ min. (at 500V DC, between case and lead wire) | | |
| | Vibration | Total amplitude 1.5mm or 10G,10Hz-55Hz-10Hz scan for 1 minute, two hours each direction of X, Y and Z | | |
| | Shock | 100m/s² (10G), 3 times each in direction of X, Y and Z | | |
| Temperature characteristic | | ±2.5% F.S. of detected pressure (25°C) at temp. Range of 0~50°C | | |
| Port size | | F1 : R1/8", M5 ; F2 :NPT1/8", #10-32UNF ; F3 : G1/8", M5 | | |
| Lead wire | | Oil-resistance cable(0.15mm²) | | |
| Weight | | Approx.86g (with 2 meter lead wire) | | |

【NOTE】 *1 : Hysteresis value is adjustable within 1 ~ 8 digits for one point set mode and window comparator mode.
*2 : If analog voltage output is selected, the analog current output cannot be selected at the same time.
*3 : If analog current output is selected, the analog voltage output cannot be selected at the same time.

## ORDERING INFORMATION

M P 4 5 C - 010 - F 1

**Pressure Range**

C : Compound (-101.0 ~ 101.0 kPa)
V : Vacuum (10.0 ~ -101.3 kPa)
P : Positive (-0.100 ~ 1.000 MPa)

**Pressure Port**

F1 : R1/8", M5
F2 : NPT1/8", #10-32UNF
F3 : G1/8", M5

**Output Specifications**

010 : 2 NPN+Analog (Voltage) output (1 ~ 5V)
011 : 2 NPN+Analog (Current) output (4 ~ 20mA)
030 : 2 PNP+Analog (Voltage) output (1 ~ 5V)
031 : 2 PNP+Analog (Current) output (4 ~ 20mA)

**Optional Parts**

MP-A10: Mounting bracket (BT-10)
MP-A11: Mounting bracket (BT-11)
MP-B3: Panel adapter (PA-E)
MP-C3: Panel adapter+Front protective lid (PA-F)

## INSTALLATION

■Connection type

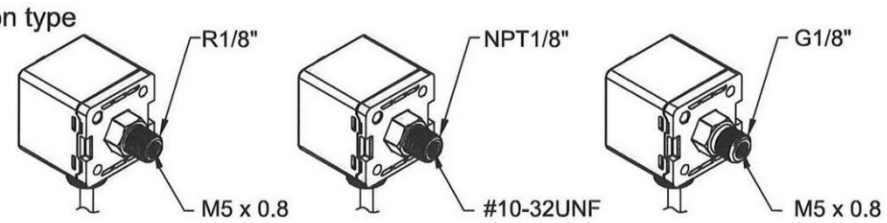


■Mounting bracket

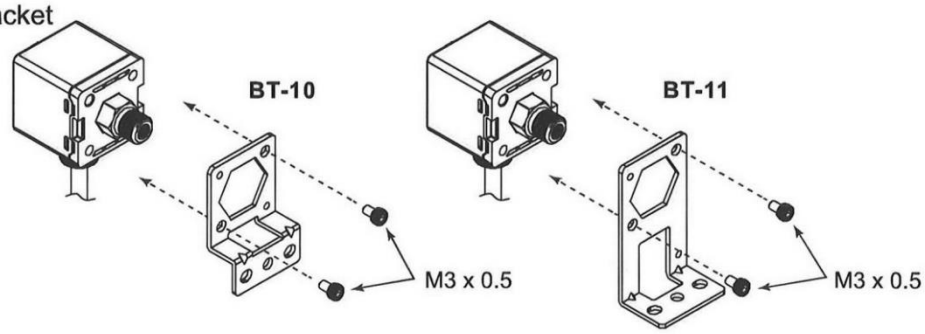


■Panel Mounting

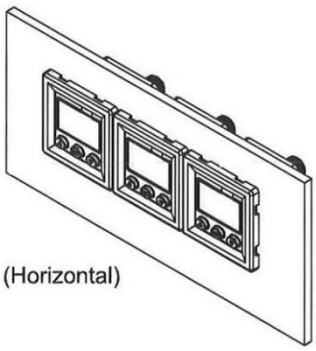

## OUTPUT CIRCUIT WIRING DIAGRAMS

■ MP45□-010-□

2 NPN+Analog Voltage output(1 ~ 5V)

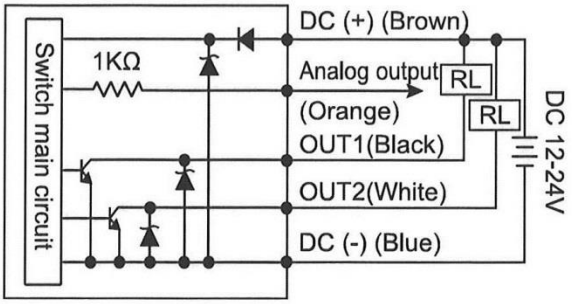


■ MP45□-030-□

2 PNP+Analog Voltage output(1 ~ 5V)

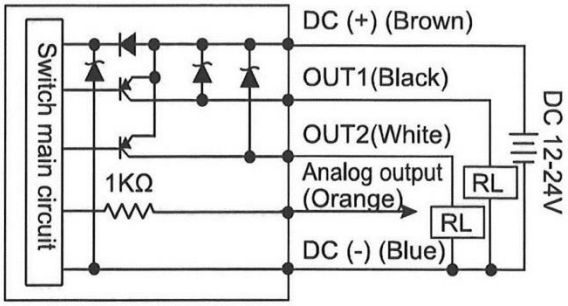


■ MP45□-011-□

2 NPN+Analog Current output(4 ~ 20mA)

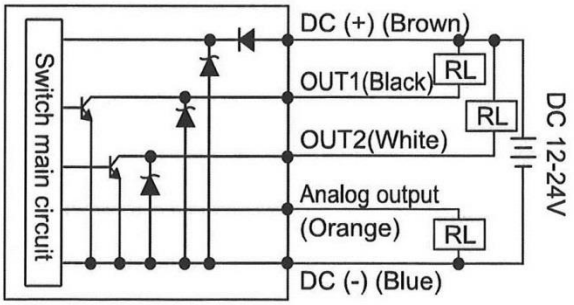


■ MP45□-031-□

2 PNP+Analog Current output(4 ~ 20mA)

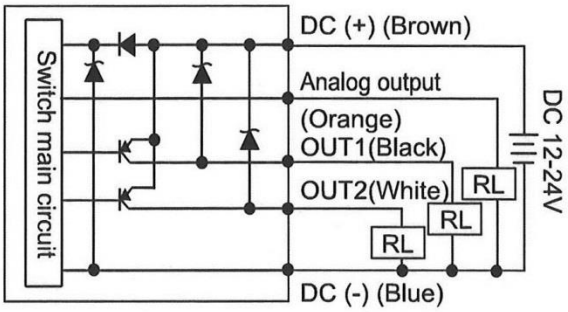


| PIN No. | Wire Color |
|---|---|
| 1 | DC (-) (Blue) |
| 2 | OUT1(Black) |
| 3 | OUT2(White) |
| 4 | Analog output(Orange) |
| 5 | DC (+) (Brown) |

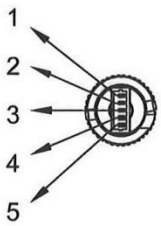


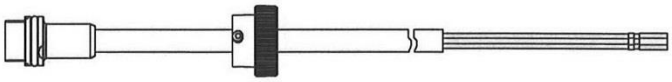

## ANALOG OUTPUT DESCRIPTION

■Analog output is proportional to the rated pressure range.

● Voltage type

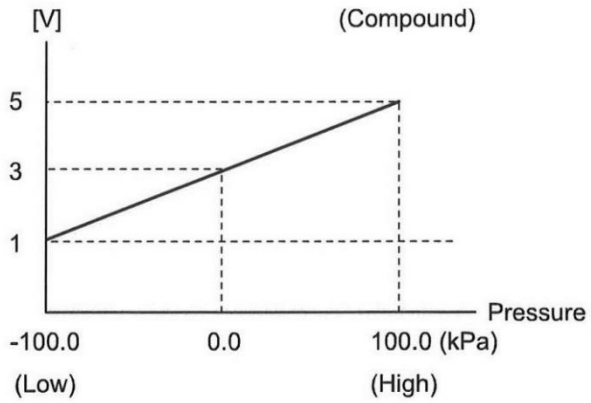


● Current type

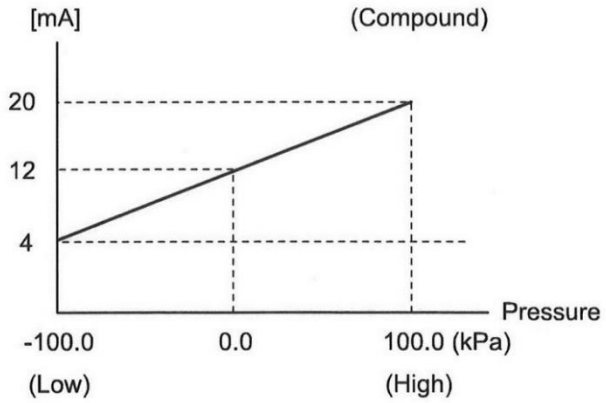


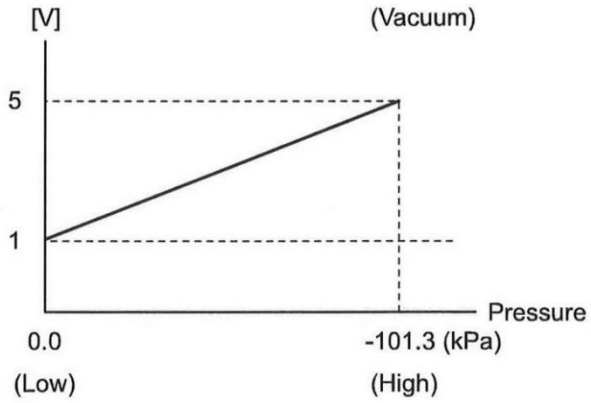


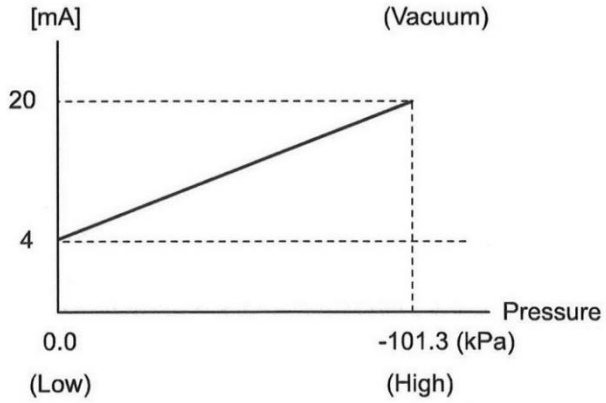


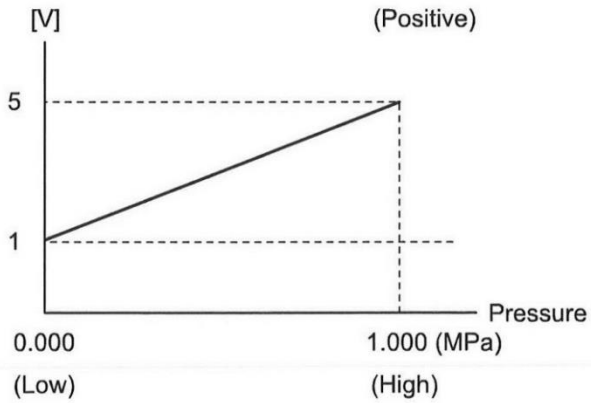


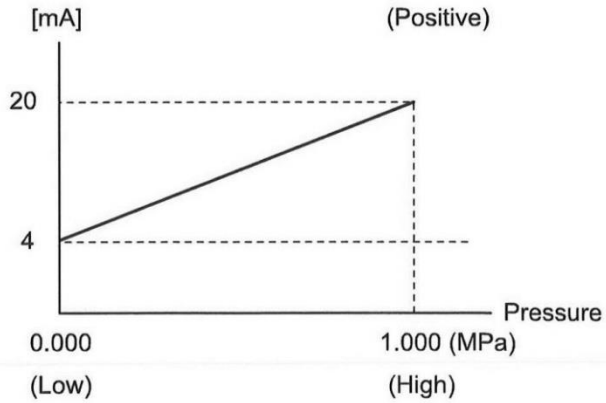

## OPTIONAL PARTS DIMENSIONS

### Dimensions

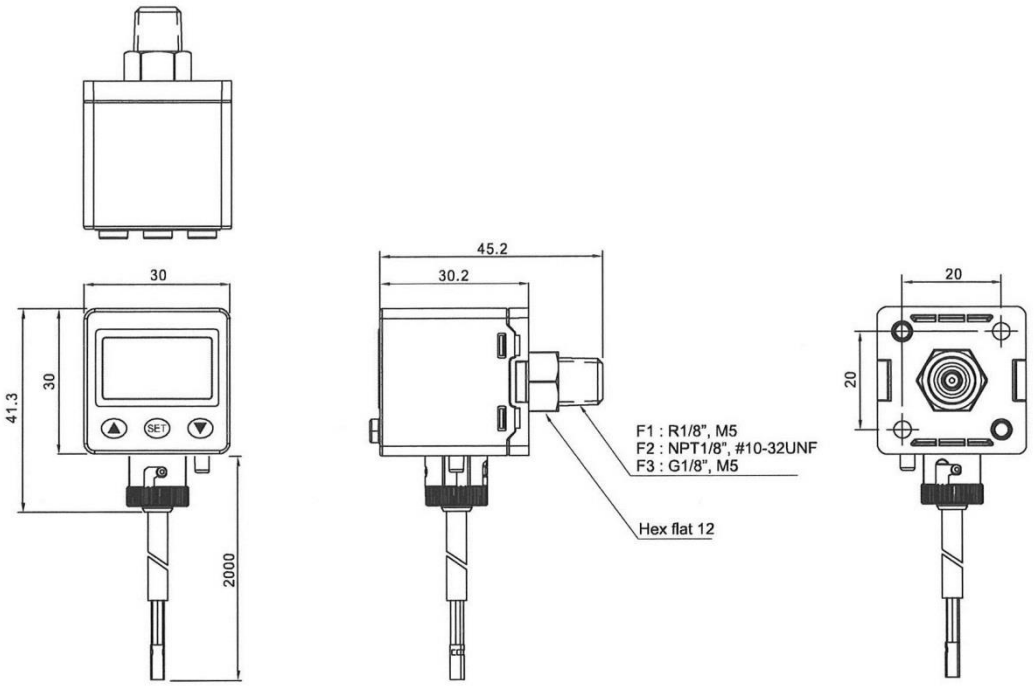


### Mounting bracket : BT-10

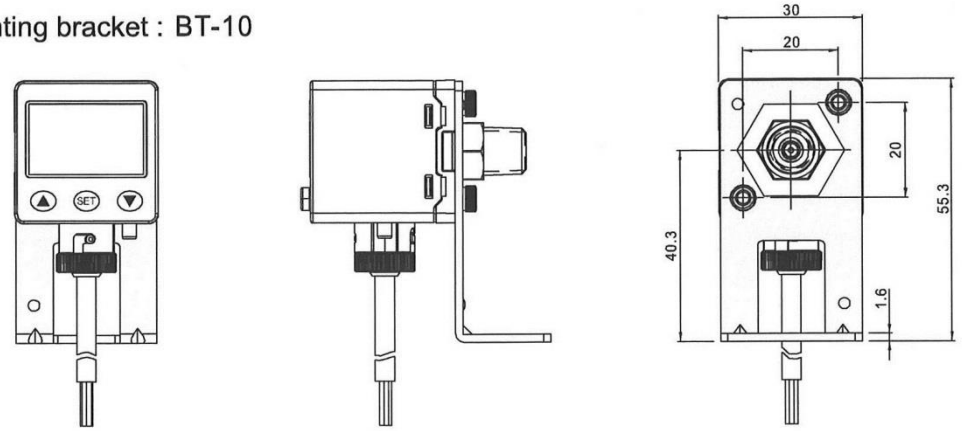


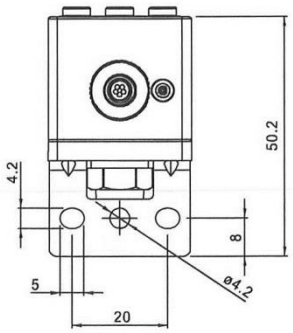

## Mounting bracket : BT-11

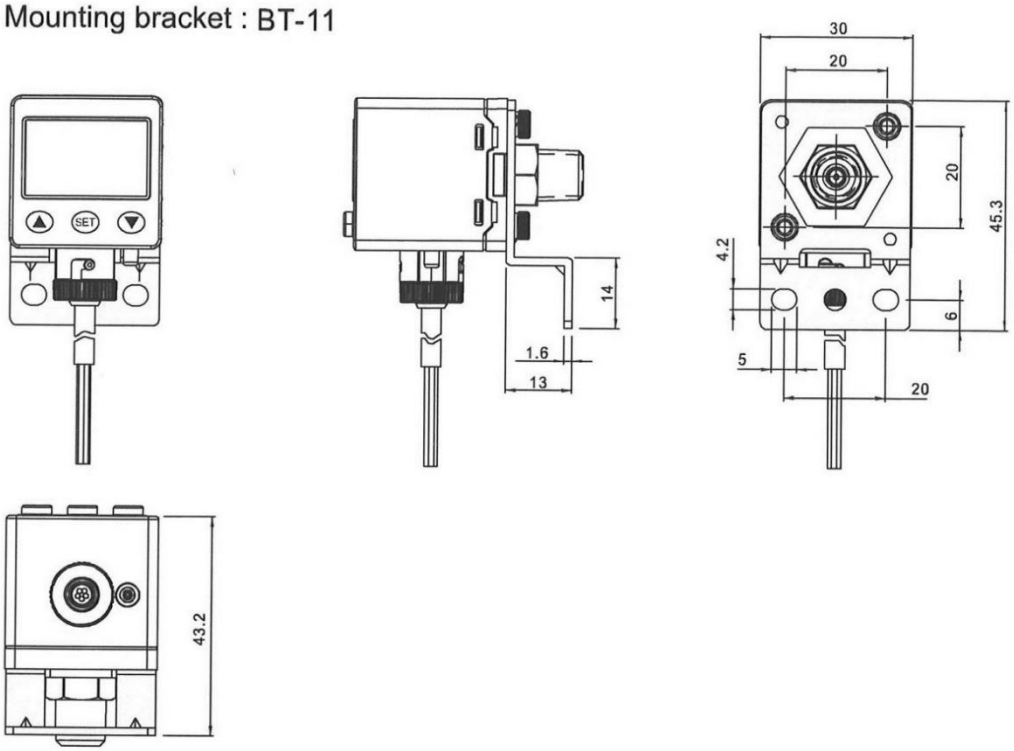


## Panel adapter : PA-E

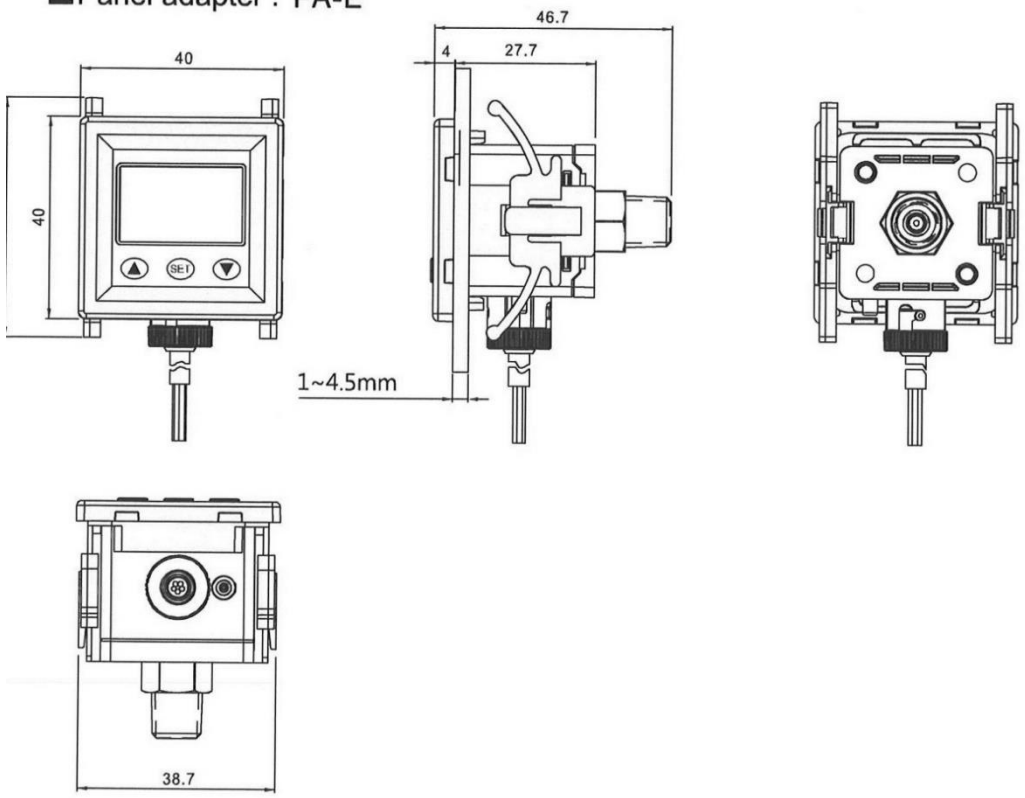

## ■Panel adapter + Front protective lid : PA-F

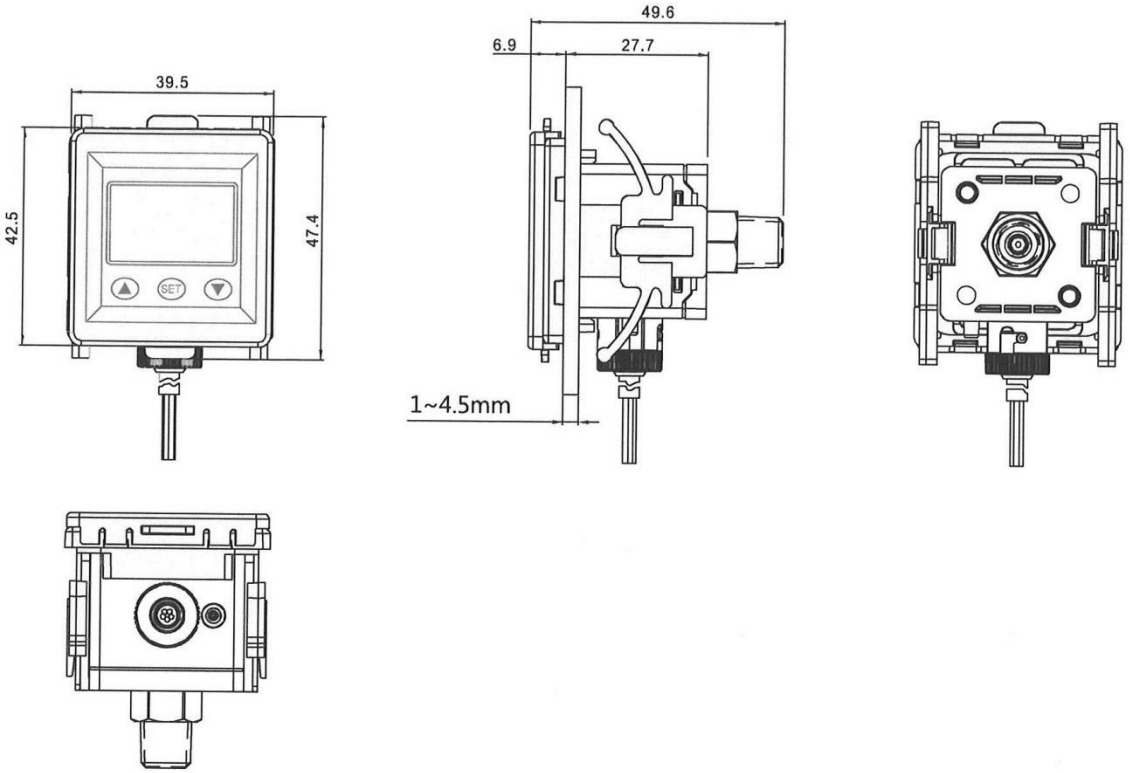


## ■Panel cutout dimensions

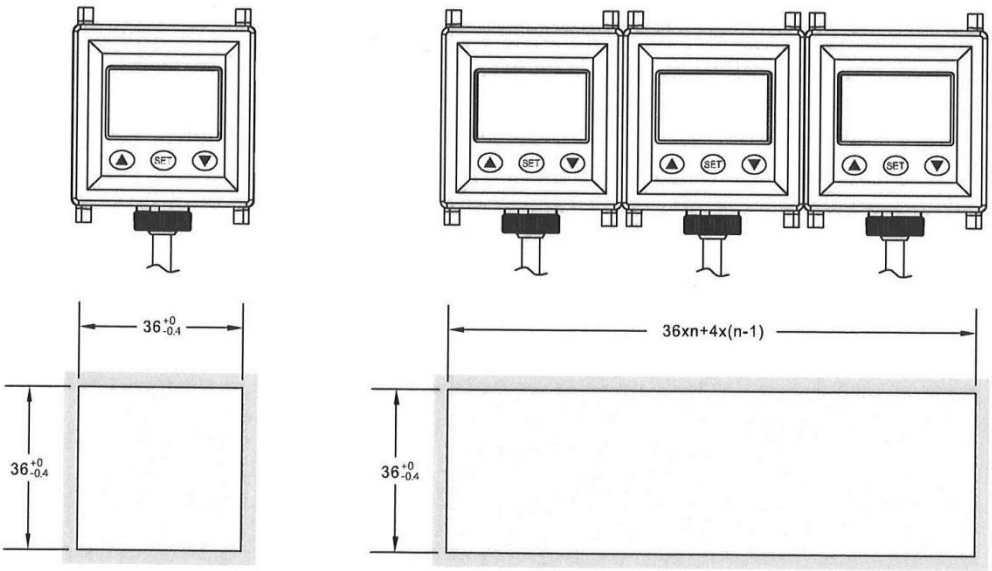

## OPERATION STEPS

### Initial setting mode

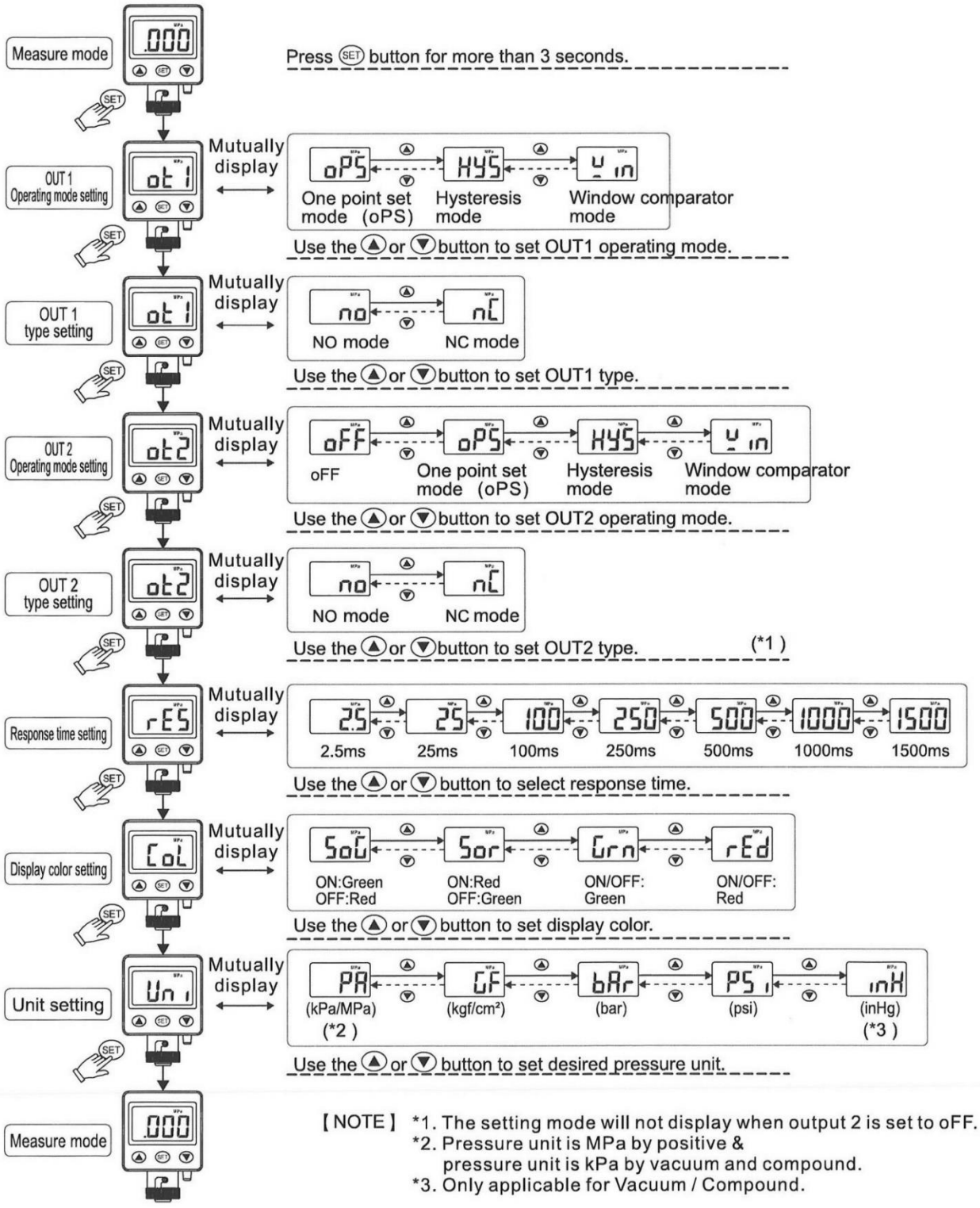


【NOTE】 *1. The setting mode will not display when output 2 is set to oFF.
*2. Pressure unit is MPa by positive & pressure unit is kPa by vacuum and compound.
*3. Only applicable for Vacuum / Compound.

## ■Advance setting mode

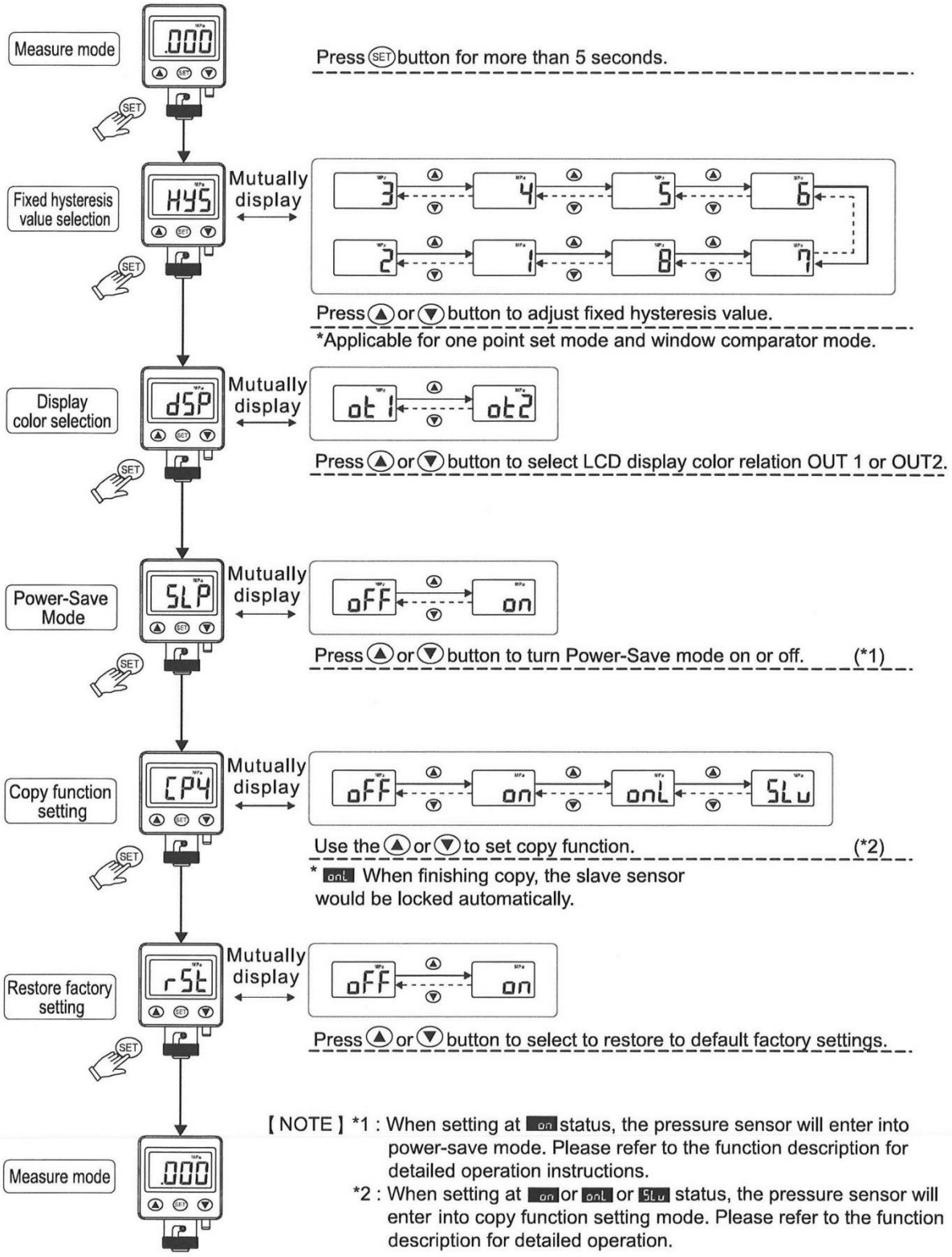


【NOTE】 *1 : When setting at on status, the pressure sensor will enter into power-save mode. Please refer to the function description for detailed operation instructions.

*2 : When setting at on or onL or SLu status, the pressure sensor will enter into copy function setting mode. Please refer to the function description for detailed operation.

# ERROR CODE INSTRUCTION / PRESSURE UNIT CONVERSION TABLE

## ERROR CODE INSTRUCTION

| Error Type | | Error code | Error Condition | Troubleshooting |
|---|---|---|---|---|
| Excess load current error | OUT1 | Er 1 | Output 1 load current is more than 125 mA | Turn power off and check the cause of overload current or lower the load current under 125 mA, then restart. |
| | OUT2 | Er2 | Output 2 load current is more than 125 mA | |
| Residual pressure error | | Er3 | During zero reset, ambient pressure is over ±3% F.S. | Change input pressure to ambient pressure and perform zero reset again. |
| Applied pressure error | | HHH | Supply pressure exceeds the upper limit of pressure setting. | Adjust the pressure within operating pressure range. |
| | | LLL | Supply pressure exceeds the lower limit of pressure setting. | |
| System error | | Er4 | Internal system error | Turn power off and then restart. If error condition remains, please return to factory for inspection. |
| | | Er5 | Internal system error | |
| | | Er6 | Internal data error | |
| | | Er7 | Internal data error | |
| Data copy error | | Er8 | Data copy error | Please recheck the model no. and wire connection, then set the salve sensor to" Slu ". Turn the power on again, if error condition remains, please return to factory for inspection. |

## PRESSURE UNIT CONVERSION TABLE

| From \ To | Pa | kPa | MPa | kgf/cm² | mmHg | psi | bar | inHg |
|---|---|---|---|---|---|---|---|---|
| 1 Pa | 1 | 0.001 | 0.000001 | 0.000010197 | 0.00750062 | 0.000145038 | 0.00001 | 0.0002953 |
| 1 kPa | 1000.000 | 1 | 0.001000 | 0.010197 | 7.500616 | 0.145038 | 0.010000 | 0.2953 |
| 1 MPa | 1000000 | 1000 | 1 | 10.197 | 7500.616 | 145.038 | 10 | 295.2998 |
| 1 kgf/cm² | 98066.5 | 98.0665 | 0.0980665 | 1 | 735.559 | 14.2233 | 0.980665 | 28.95979 |
| 1 mmHg | 133.32 | 0.13332 | 0.000133 | 0.0013595 | 1 | 0.019336 | 0.0013332 | 0.039370 |
| 1 psi | 6895 | 6.895 | 0.006895 | 0.07031 | 51.7157 | 1 | 0.06895 | 2.036074 |
| 1 bar | 100000.0 | 100.0000 | 0.100000 | 1.01972 | 750.062 | 14.5038 | 1 | 29.52998 |
| 1 inHg | 3386.388 | 3.386388 | 0.003386 | 0.034530 | 25.40000 | 0.491141 | 0.033863 | 1 |

# Bedienungsanleitung

Elektronischer Druckschalter
mit Digitalanzeige, 2-farbig

**Gilt für folgende Artikel:**

| Elektronischer Druckschalter mit Digitalanzeige | |
|---|---|
| Artikel Nr. | Typen Nr. |
| 133157 bis 133160 | EDS010NPN15G bis EDS010PNP420G |